LG

WASHING MACHINE
SERVICE MANUAL

⚠ CAUTION

READ THIS MANUAL CAREFULLY TO DIAGNOSE
PROBLEMS CORRECTLY BEFORE SERVICING THE UNIT.

MODEL : WM2140C*

LG Electronics Inc.

Jul. 2010 PRINTED IN KOREA

P/No. : MFL30599177

1. SPECIFICATIONS

ITEM		WM2140C*
COLOR		W:BLUE WHITE
POWER SUPPLY		AC 120 V, 60 Hz
PRODUCT WEIGHT		190 lbs. (86kg)
ELECTRIC POWER CONSUMTION	WASHING	280 W
	DRAIN MOTOR	80 W
REVOLUTION SPEED	WASH	42 rpm
	SPIN	0 - 1100 rpm
CYCLES		7
WASH/RINSE TEMPERATURES		5
SPIN SPEEDS		5
OPTIONS		Prewash, Rinse+Spin, Quick Cycle, Stain Cycle, Tub Clean,
		Delay Wash, Water Plus, Extra Rinse
CUSTOM PROGRAM		-
WATER CIRCULATION		-
OPERATIONAL WATER PRESSURE		14.5 - 116 psi (800 kPa)
CONTROL TYPE		Electronic
WASH CAPACITY [cu.ft.]		3.47 (4.8 IEC)
DIMENSIONS		27" (W) X 30 1/32" (D) X 38 11/16" (H), X 50 13/16" (D door open)
DELAY WASH		up to 19 hours
DOOR SWITCH TYPE		PTC + Solenoid
Door Frame		Blue white
WATER LEVEL		12 Step (by sensor)
LAUNDRY LOAD SENSING		Incorporated
ERROR DIAGNOSIS		Incorporated
AUTO POWER OFF		Incorporated
CHILD LOCK		Incorporated
DRY		Washer Only

⚠WARNING:

To reduce the risk of injury to persons, adhere to all industry recommended safety procedures including the use of long sleeved gloves and safety glasses.Failure to follow all of the safety warnings in this manual could result in property damage, injury to persons or death.

2. FEATURES & TECHNICAL EXPLANATION

2-1. FEATURES

- **Direct Drive System**
  The advanced Brushless DC motor directly drives the drum without belt and pulley.

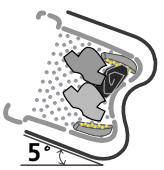

- **Tilted Drum and Large Door Opening**
  Tilted drum and large opening make it possible to load and unload clothing more easily.

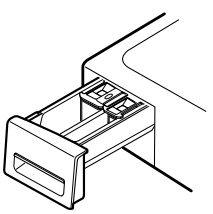

- **Time-Released Dispenser**
  Detergent, fabric softener and bleach are dispensed separately at the right time during wash cycle.

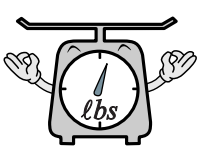

- **Automatic Wash Load Detection**
  Automatically detects the load and optimizes the washing time.

- **Child Lock**
  The Child lock prevents children from pressing any button to change the settings during operation.

2-2. NEURO FUZZY WASHING TIME OPTIMIZATION

To get the best washing performance, optimal time is determined by the water temperature, the selected washing temperature, and the size of the load.

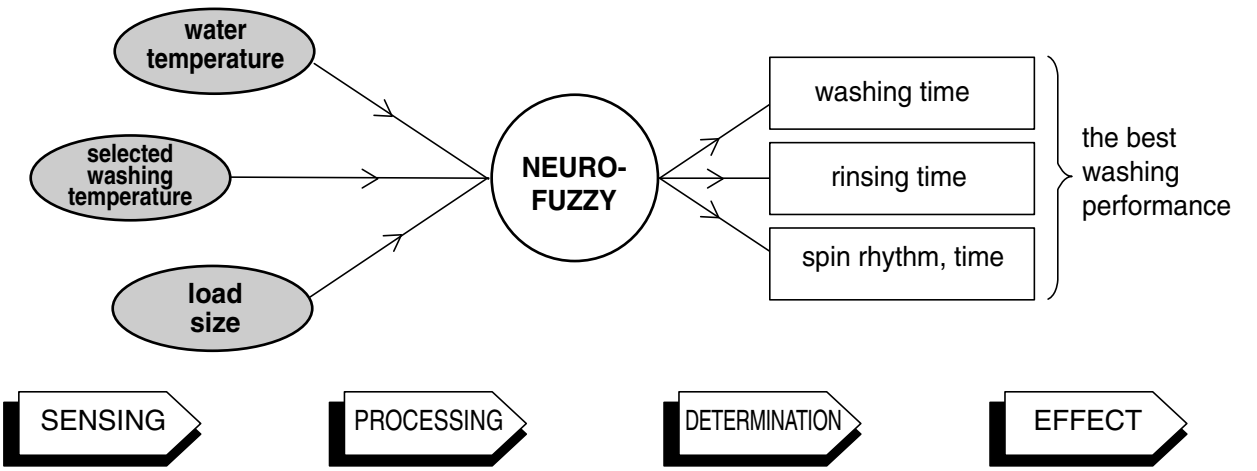

2-3. WATER LEVEL CONTROL

- This model incorporates a pressure sensor which can sense the water level in the tub.
- The water supply is stopped when the water level reaches the preset level, the washing program then proceeds.
- Spinning does not proceed until the water in the tub drains to a certain level.

2-4. DOOR CONTROL

- The door can be opened by pulling the door handle whenever washer is not in operation.
- When the cycle is completed, the DOOR LOCKED light will turn off.
- If a power failure has occurred while in operation, the door will unlock after 5 minutes.
- Clicking sounds can be heard when the door is locked/unlocked.

2-5. THE DOOR CAN NOT BE OPENED

- While program is operating
- When a power failed and power plug is taken out in operation
- While Door Lock lights turn on.
- White the motor is in the process of intertial rotating, through the operation is paused.

2-6. DOOR LOCKED LAMP LIGHTS

- When the frequency of water level is lower than 22.9 kHz
  (It can be canceled when the frequency is more than 23.8 kHz)
- When the temperature inside the tub is higher than 45 ℃ and water level is not 25.5 kHz
  (It can be canceled when the water level is 25.5 kHz or the temperature inside the tub is lower than 40 ℃)

2-7. CHILD LOCK

- Use this option to prevent unwanted use of the washer. Press and hold OPTION button for 3 seconds to lock/unlock control.
- When Child lock is set, ì CL î blinks and all buttons are disabled except the Power button. You can lock the washer while it is operating.
- CHILD LOCK lasts after the end of cycle. If you want to deactivate this function,Press and hold the OPTION button for 3 seconds.

3. PARTS IDENTIFICATION

Shipping Bolts

Power Plug

- If the supply cord is damaged, it must be replaced by the manufacturer or its authorized service technician in order to avoid a hazard.

Control Panel

Drain Hose

Dispenser

Drum

Door

Back of Washer

Cold Water Inlet

Air Vent for Safety

Hot Water Inlet

Lower Cover Cap

Adjustable Feet

Drain Plug

Drain Pump Filter

■ ACCESSORIES

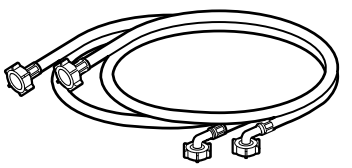

Hot/Cold (1 each) Hose

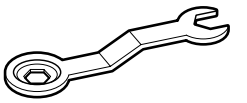

Wrench
for removing shipping bolts and leveling the washer

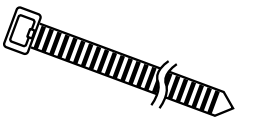

Tie strap
to secure drain hose to standpipe, inlet hose, or laundry tub

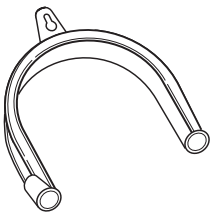

Hose retainer

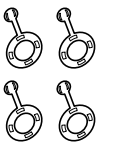

Cap (4 each)
to cover the holes created after removing the shipping bolts

4. INSTALLATION & TEST

1 Before servicing, ask the customer what the trouble is.
2 When installing or repairing the washer, Check with the troubleshooting guide.
3 Check the setup (power supply is 120 V AC, remove the transit bolts....).
4 Check with the troubleshooting guide.
5 Plan your service method by referring to the disassembly instructions.
6 Service the unit.
7 After servicing, operate the appliance to see whether it functions correctly.

■ STANDARD INSTALLATION

The appliance should be installed as follows:

REMOVE THE SHIPPING BOLTS	INSTALL THE APPLIANCE ON A FLAT AND FIRM SURFACE	ADJUST THE LEVELING
• Remove the 4 shipping bolts with the supplied wrench. ※ Do first lower side to remove easily. • Keep the shipping bolts and spanner for future use. • Insert the 4 caps (provided) into the hole. 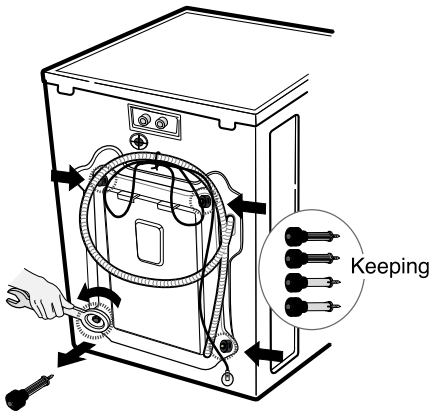 	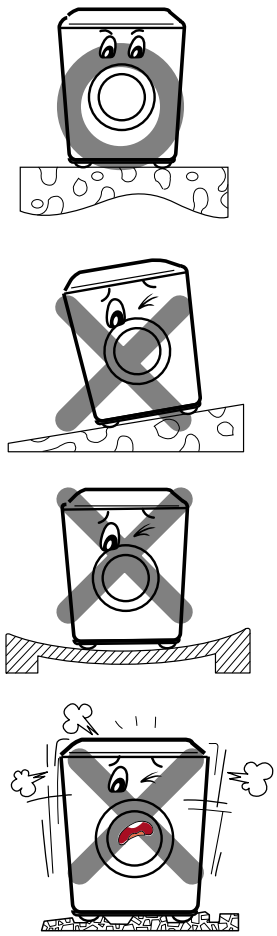	• Turn the leveling feet to adjust the appliance. 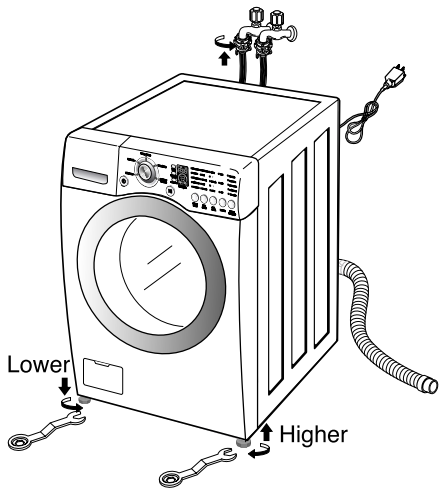 • Turn clockwise to raise; counterclockwise to lower.

■ HOW TO CONNECT THE INLET HOSE

- Verify that the rubber washer is inside of the valve connector.
- Tighten the inlet hose securely to prevent leaks.

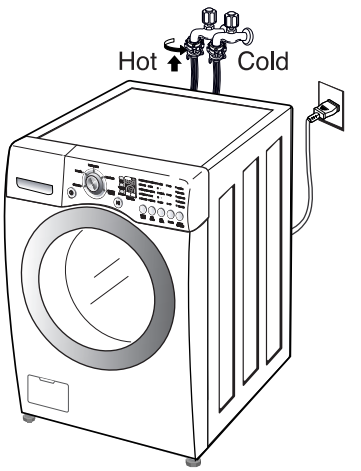

■ CONNECT THE DRAIN HOSE

· Make sure that the hose is not twisted.

· Avoid submerging the end of the hose.

※ The end of the drain hose should be placed less than 96” from the floor.

■ CONNECT POWER PLUG

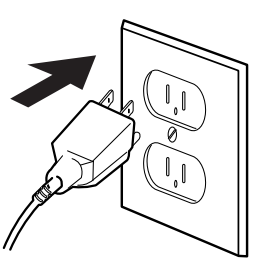

· Connect the power plug to the wall outlet.

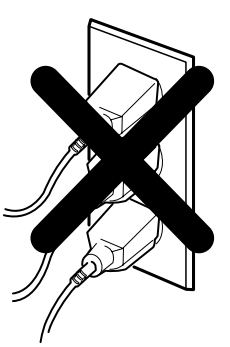

· Avoid connecting several electric devices, as doing so may cause a fire.

7 TEST OPERATION

1 Preparation for washing.

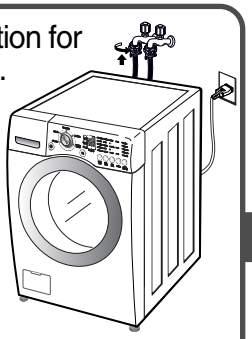

- Connect the power plug to the outlet.
- Connect the inlet hoses.

2 Press the POWER button.

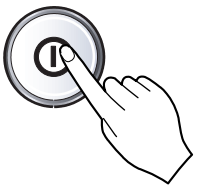

3 Press the Start/Pause button.

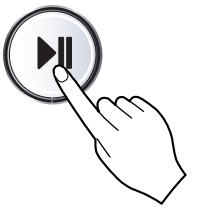

- Listen for a click to determine if the door has locked.

4 Check the water supply.

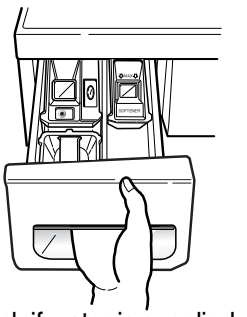

- Check if water is supplied through the detergent dispenser.

5 Check the automatic reverse rotation.

- Check if the drum rotates clockwise and counterclockwise.

6 Check the water temperature.

- Press the WASH/RINSE button and the present temperature will be displayed.

7 Check the drain and spin functions.

- Power off and the power on.
- Press the SPIN SPEED button.
- Press the START/PAUSE button.
- Check the spin and drain functions.

8 Press the START/PAUSE button.

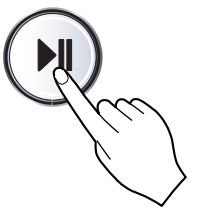

- Listen for a click to determine if the door is unlocking.

9 Water removal

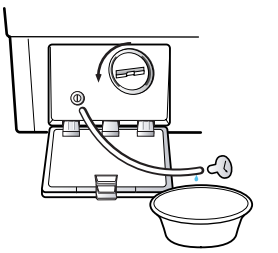

- If SVC is needed during check, remove the remaining water by pulling out the hose cap.

5. OPERATION

■ WM2140C*

5. OPERATION

Delay Wash, Water Plus/* Extra Rinse

- Delay Wash allows the start of any cycle to be delayed for 1~19 hours
- Water Plus adds extra water to the wash and rinse cycles for superior results
- Extra rinse Provides an additional rinse

EST. TIME REMAINING

- This display shows:
  a) the estimated time remaining in the cycle when operation.
  b) an error code when an error has been detected.

DOOR LOCKED lamp

- Light whenever the door of the washer is locked.
- The door can be unlocked by pressing the **Start/Pause** button to stop the washer.

POWER button

- Use this button to turn power **On/Off.**

START/PAUSE button

- Use this button to **start/stop** the washer.

OPTION button

- **Prewash:** Use this option for loads that need pretreatment.
  It adds 13 to 17 minutes prewash and drain.
- **Rinse + Spin:** Use this option to rinse and then spin.
- **Quick Cycle:** The Quick offers a quick cycle time.
- **Stain Cycle:** Add time to the wash and rinse for better stain removal. Automatically provide a rinse.
- **Tub Clean:** Use this option to clean tub.

CYCLE SELECTOR

- Rotate the cycle selector knob to select the cycle designed for different types of fabric and soil level.

Wash, Rinse temp., Spin speed, Soil Level, Beeper Button.

- Select a water temperature based on the type of load you are washing.
- To change the spin speed, press the Spin Speed button repeatedly to cycle through available options.
- To change the soil level, press the Soil Level button repeatedly until the desired setting is on.
- Press Repeatedly to adjust the Volume

6. WIRING DIAGRAM/PROGRAM CHART

■ WM2140C*

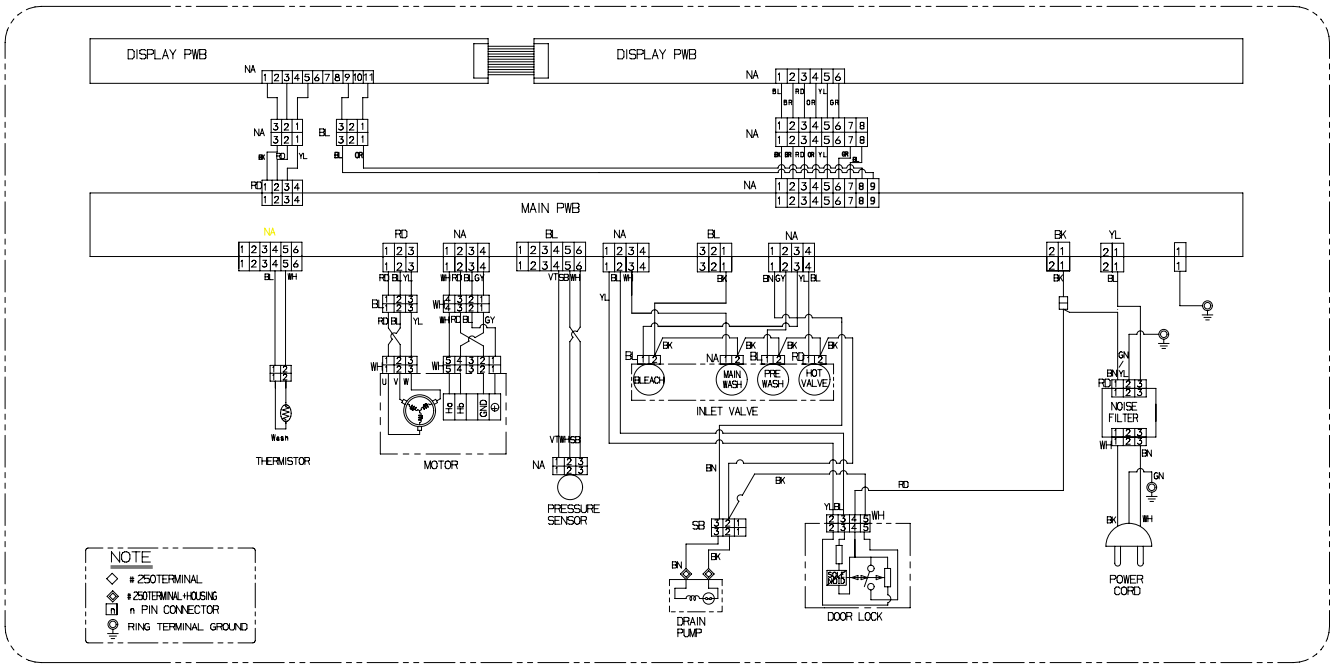

PROGRAM CHART

* Water Supply: W–S * Intermittent Spin: I–S * Disentangle: D–T

COURSE \ CYCLE STEP	Wash										Rinse																Spin			END	AUTO OFF	**Approx. Working Time (Minutes)
	Pre				Main						Normal												Extra Rinse									
						Wash		Cool-down			1				2				3				4									
	W–S	Wash	Drain	I–S	W–S	Heat	Wash	W–S	Rinse	Drain	Drain	I–S	W–S	Rinse	Drain	I–S	W–S	Rinse	Drain	I–S	W–S	Rinse	Drain	I–S	W–S	Rinse	Drain	Spin	D–T			
	1	2	3	4	5	6	7	8	9	10	11	12	13	14	15	16	17	18	19	20	21	22	23	24	25	26	27	28	29	30	31	
Time (SEC)	60	*	60	300	180 ~ 240		*	60	60	60	60	300	60	240	60	300	60	240	60	300	60	240	60	300	60	240	60	*	60 ~ 180	20	20	
BULKY/ LARGE		5					23																					5				57
PERM. PRESS		7					14 20																					11				76
DELICATES		5					18																					5				42
COTTON/ NORMAL		3 6					12 18							2				2										8 11				57
HAND WASH/ WOOL							25																					5				56
SPEED WASH							2							1				1										8				15
DRAIN+ SPIN																												11				19

Basic Cycle
Optional Cycle
Pre-Setting Time : Water Supply - 60 sec.
Drain - 60 sec.

* Wash time is in minutes.
** The total working time will vary with the load size, water temperature and ambient temperature.

7-1. BEFORE PERFORMING SERVICE

■ Be careful of electric shock when disconnecting parts while troubleshooting.

■ The voltage of each terminal is 120 V AC and DC when the unit is plugged in.

7-2. QC TEST MODE.

The washer must be empty and the controls must be in the off state.

1. Press the SPIN SPEED and SOIL LEVEL buttons simultaneously.
2. Press the Power button, while the above condition. Then buzzer will sound twice.
3. Press the Start/Pause button repeatedly to cycle through the test modes.
4. 18:88 Alternate blinking of 16:41 , 14:09 and 41:05

Number of times the Start/Pause button is pressed	Check Point	Display Status
None	Turns on all lamps and locks the door.	18:88
1 time	Tumble clockwise.	rpm (40~50)
2 times	Low speed Spin.	rpm
3 times	High speed Spin.	rpm
4 times	Inlet valve for prewash turns on.	Water level frequency (25~65)
5 times	Inlet valve for main wash turns on.	Water level frequency (25~65)
6 times	Inlet valve for hot water turns on.	Water level frequency (25~65)
7 times	Inlet valve for bleach turns on.	Water level frequency (25~65)
8 times	Tumble counterclockwise.	rpm (40~50)
9 times	Water temperature (Thermistor)	Water temperature [℃]
10 times	Drain pump turns on.	Water level frequency (25~65)
11 times	Power off and unlock the door.	Turn off all lamps.

7-3. HOW TO CHECK THE WATER LEVEL FREQUENCY

* Press the Delay and Signal button simultaneously.

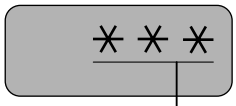

● The digits indicate the water level frequency (x.1 kHz).

So, for example a display indicating 241: a Water level frequency of 241 x.1 kHz
= 24.1 kHz

7-4. ERROR DISPLAY

- If you press the START/PAUSE button when an error is displayed, any error except 『PE』 will disappear and the machine will go into the pause status.
- In case of 『PE』,『tE』,『dE』 if the error is not resolved within 20 sec., or the in case of other errors, if the error is not resolved within 4 min., power will be turned off automatically and the error code will blink. But in the case of 『FE』, power will not be turned off.

	ERROR	SYMPTOM	CAUSE
1	WATER INLET ERROR	IE	• Correct water level (246) is not reached within 8 minutes after water is supplied or it does not reach the preset water level within 25 minutes.
2	IMBALANCE ERROR	UE	• The load is too small. • The appliance is tilted. • Laundry is gathered to one side. • Non distributable things are put into the drum.
3	DRAIN ERROR	OE	• Not fully drained within 10 minutes.
4	OVER FLOW ERROR	FE	• Water is overflowing (water level frequency is over 213). ※ If FE is displayed, the drain pump will operate to drain the water automatically.
5	PRESSURE SENSOR ERROR	PE	• The SENSOR SWITCH ASSEMBLY is out of order.
6	DOOR OPEN ERROR	dE	• Door not all the way closed. • Loose electrical connections at Door switch and PWB Assembly. • The DOOR SWITCH ASSEMBLY is out of order.
7	THERMISTOR ERROR	tE	• The THERMISTOR is out order.

	ERROR	SYMPTOM	CAUSE
8	LOCKED MOTOR ERROR	LE	• The connector (3-pin, male, white) in the MOTOR HARNESS is not connected to the connector (3-pin, female, white) of STATOR ASSEMBLY. • The electric contact between the connectors (3-pin, male, white) in the MOTOR HARNESS and 4-pin, female, white connector in the MAIN PWB ASSEMBLY is bad or unstable. • The MOTOR HARNESS between the STATOR ASSEMBLY and MAIN PWB ASSEMBLY is cut (open circuited). • The hall sensor is out of order/defective.
9	EEPROM ERROR	EE	• EEPROM is out of order. ※ Displayed only when the START/PAUSE button is first pressed in the QC Test Mode.
10	POWER FAILURE	PF	• The washer experienced a power failure.

8. ERROR DIAGNOSIS AND CHECK LIST

8-1. DIAGNOSIS AND SOLUTION FOR ABNORMAL OPERATION

SYMPTOM	GUIDE FOR SERVICE CALL
No power	Is the power plug connected firmly to 120 V AC outlet? 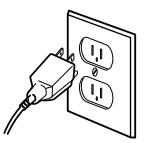 YES Power failure? or Breaker opened? Is the outlet controlled by a switch? 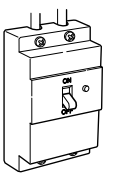 NO Visit to service.
Water inlet trouble 1E	Is 1E displayed? 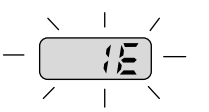 YES Is the tap opened? YES Is the tap frozen? NO Is the water supply shut-off? NO Is filter in the inlet valve clogged with foreign material? YES → Clean the filter of inlet valve 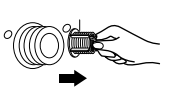 NO Visit to service.

SYMPTOM	GUIDE FOR SERVICE CALL
Door error dE	Started with door opened? YES → dE Close the door. NO Was the load too large? YES → Avoid overloading. NO Clicking sound is heard once or twice, when the START/PAUSE button is pressed to start the cycle? NO Visit to service. Check if the door switch is OK.
Drain trouble OE	Is OE displayed? YES Is the drain pump filter clogged with foreign material such as pins, coins, etc? YES → Clean up the filter. NO Is the drain hose frozen kinked, or crushed? NO Visit to service.

SYMPTOM	GUIDE FOR SERVICE CALL
Suds overflow from the appliance. (In this condition, wash and spin do not operate normally)	Is a low-sudsing detergent used? YES Is the proper amount of detergent used as recommended? YES Recommend to reduce the amount of detergent. 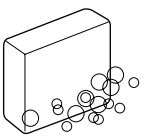 LOW-SUDSING ✳ This appliance has an automatic suds sensing function which prevents overflow. ✳ When excessive suds are sensed, the suds removing implementations such as drain, water input, pause will operate, without rotating the drum.
Liquid laundry products do not flow in.	Is liquid laundry product put in the correct compartment of the dispenser? YES Is the cap clogged? YES Explain proper use of liquid laundry products. **Clean the compartment.** 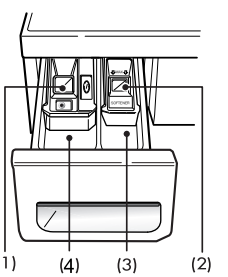 (1) Liquid chlorine Bleach Compartment (2) Liquid fabric Softener Compartment (3) Prewash Compartment (4) Main Wash Compartment
FE bE PE LE	Visit to service.

8-2. FAULT DIAGNOSIS AND TROUBLESHOOTING

⚠ CAUTION

1. Be careful of electric shock if disconnecting parts while troubleshooting.
2. First of all, check the connection of each electrical terminal with the wiring diagram.
3. If you replace the MAIN PWB ASSEMBLY, reinsert the connectors correctly.

NO POWER

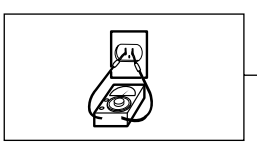

Is the supplied voltage 120 V AC?

NO → Check the fuse or reset the circuit breaker.

YES ↓

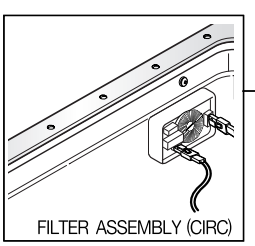

Is the voltage between the pins of 2 FILTER ASSEMBLY connector 120 V AC?

NO → Replace the FILTER ASSEMBLY (CIRC).

YES ↓

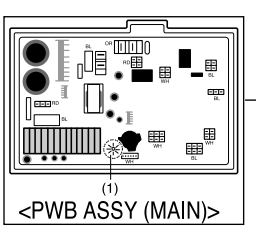

Is the LED (1) on?

NO → Replace MAIN PWB ASSEMBLY.

YES ↓

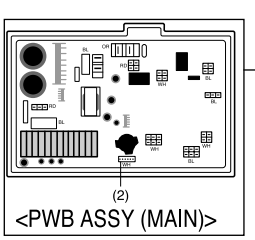

Are the connectors (2) on the PWB loose?

YES → Reconnect.

NO ↓

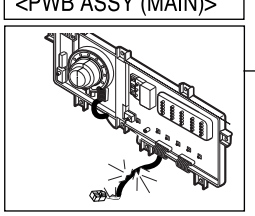

Is wire of the DISPLAY PWB ASSEMBLY broken?

NO → Replace the MAIN PWB ASSEMBLY.

YES ↓

Replace DISPLAY PWB ASSEMBLY or repair wire.

VIBRATION & NOISE IN SPIN

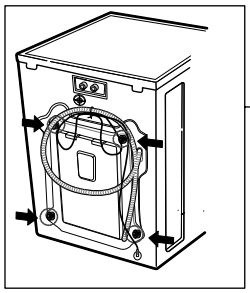

Have all the transit bolts and base packing been removed?

NO → Remove the transit bolts and Base packing.

YES ↓

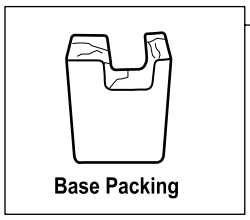

Is the washer installed on a solidly constructed floor?

NO → Move the washer or reinforce the floor.

YES ↓

Check if the washer is perfectly level as follows:

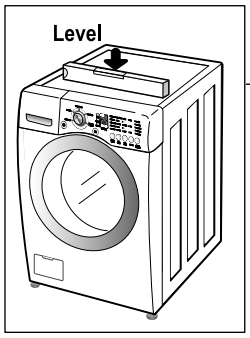

Check the leveling of the washer with a Level and check that the washer is stable.

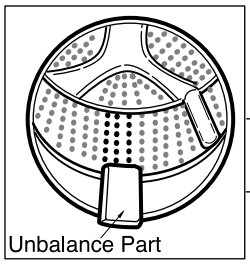

Put an unbalance part (rubber) inside of drum and start QC test mode and run in high spin (Refer to section 7-2).
When the machine is spinning in high speed, verify that it is stable.

If you do not have the unbalance part, put 4.5 to 6.5 lbs (2 to 3 kg) of clothing. Once loaded, press power, Rinse+Spin and the start/pause button in sequence.
When the machine is spinning in high speed, verify that it is stable.

YES ↓

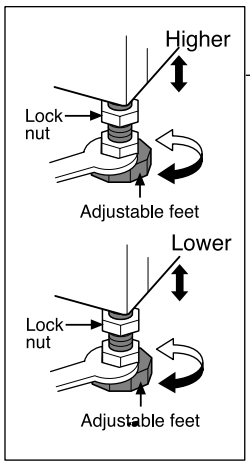

If it is not stable, adjust feet accordingly. After the washer is level, tighten the lock nuts up against of the base of the washer. All lock nuts must be tightened.

If it still has severe vibration and noise, regulate a specific spin speed that generates excessive vibration and noise as follows:

1) Put an unbalance part (rubber) inside of the drum.

2) Start the QC test mode (Refer to section 7-2).

3) Press Delay Wash button, then '5' is displayed.

4) Press the Spin Speed button repeatedly to select EXTRA HIGH.

5) Press the Start/Pause button.

6) Press the Signal button repeatedly to set spin speed (600, 700, 800, 900, 1000, 1100 rpm) and check if there is vibration and noise.

7) If there is no vibration and noise, increase the spin speed by pressing Signal button.

8) If there is vibration and noise, press the Cycle selector button to reduce the Spin Speed (reduce by 50 and 100 rpm). In case of 600 rpm, it can not reduce the spin speed.

9) If vibration and noise are reduced, press the WASH/RINSE button to store (2 beep sounds).

* If you want to return to factory default spin speed setting, repeat above steps except step 8).

NO WATER SUPPLY

Is water supply shut-off?

NO

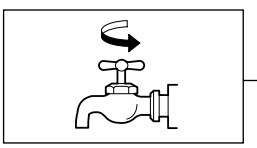

Is the tap opened? — NO → Open the tap.

YES

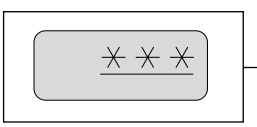

When you press both **SPIN SPEED** button and **SOIL LEVEL** button simultaneously, is the water level frequency below 246? — YES → Check the AIR CHAMBER and the tube (clogged).

NO

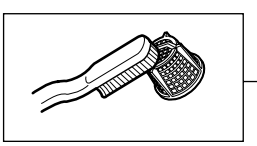

Is the inlet valve filter clogged? — YES → Clean the filter.

NO

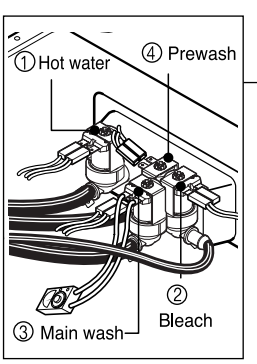

Is resistance between each terminal of INLET VALVE ASSEMBLY 0.8-1.2 kΩ? — NO → Replace the INLET VALVE ASSEMBLY.

YES

Verify the voltage of the inlet valve connector is 120 V AC.
(Refer to 7-2 QC TEST MODE) — NO → Check electrical connection. Replace the MAIN PWB ASSEMBLY.

DETERGENT DOES NOT FLOW IN

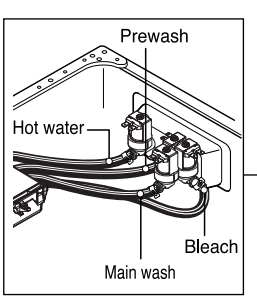

Is water supplied? — NO → Refer to 「NO WATER SUPPLY」

YES

Are receptacles correctly connected to the terminals of the INLET VALVE ASSEMBLY? — NO → Check the wiring.

YES

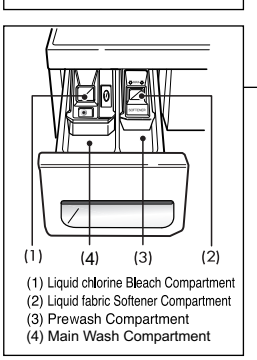

Has detergent been put in the correct compartment of the dispenser? — NO → Put the detergent in the correct place.

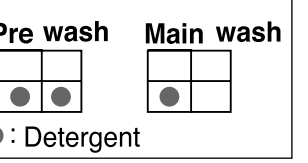

YES

Is the detergent caked or hardened? — YES → Clean the dispenser.

SOFTENER/BLEACH DOES NOT FLOW IN

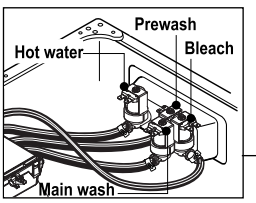

Is water supplied?

- **NO** → Refer to 「NO WATER SUPPLY」
- **YES** ↓

Are the plugs correctly connected to the terminals of the INLET VALVE ASSEMBLY?

- **NO** → Check the wiring on the dispenser.
- **YES** ↓

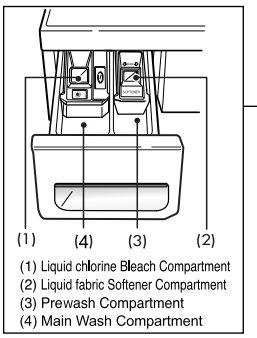

Is softener/bleach put in the correct compartment of the drawer?

- **NO** → Put it in the correct compartment.
- **YES** ↓

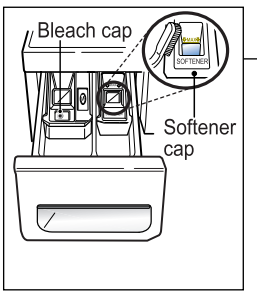

Is the softener/bleach cap clogged?

- **YES** → Clean the Cap and Container.

ABNORMAL SOUND

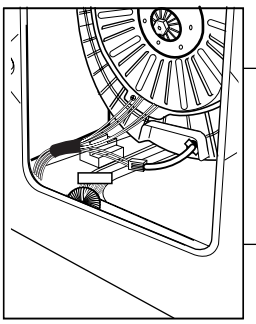

Is the motor bolt loosened?

- **YES** → Secure the bolt.
- **NO** ↓

Is there friction noise coming from the motor?

- **YES** → Replace the STATOR ASSEMBLY or ROTOR ASSEMBLY.

HEATING WITHOUT WATER

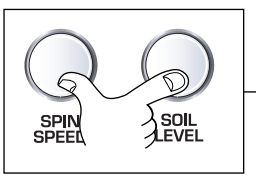

When pressing SPIN SPEED and SOIL LEVEL at the same time after draining, is the water level frequency 255?
When pressing SPIN SPEED and SOIL LEVEL buttons at the same time while washing, is the water level frequency between 230 - 243 ?

NO → Replace the SENSOR SWITCH ASSEMBLY.

YES ↓

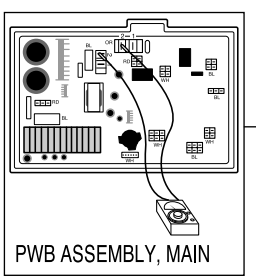

Check the voltage between two pins while pressing the POWER button. Is the voltage 120 V AC?

YES → Replace the MAIN PWB ASSEMBLY.

DRAIN MALFUNCTION

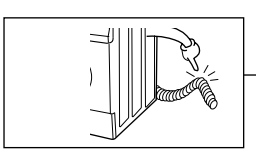

Is the drain hose twisted or frozen?

YES → Repair the DRAIN HOSE ASSEMBLY.

NO ↓

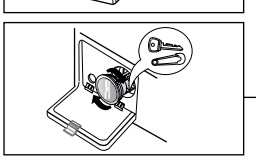

Is the impeller of the drain pump clogged?

YES → Remove foreign material.

NO ↓

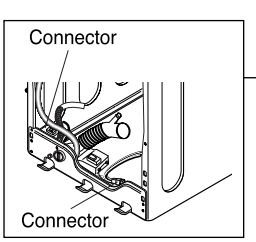

Is the connector disconnected, disassembled?

YES → Reconnect or repair the connector

NO ↓

Is the coil of the drain pump too high or low? (resistance of the coil is 10-20 Ω)

YES → Replace the DRAIN PUMP ASSEMBLY.

NO ↓

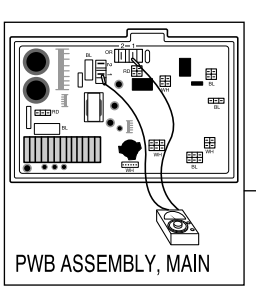

When checking voltage between connectors during spin, is the voltage 120 V AC as in the figure?

NO → Replace the MAIN PWB ASSEMBLY.

9. DISASSEMBLY INSTRUCTIONS

✻ Be sure to unplug the machine out of the outlet before disassembling and repairing the parts.

CONTROL PANEL ASSEMBLY

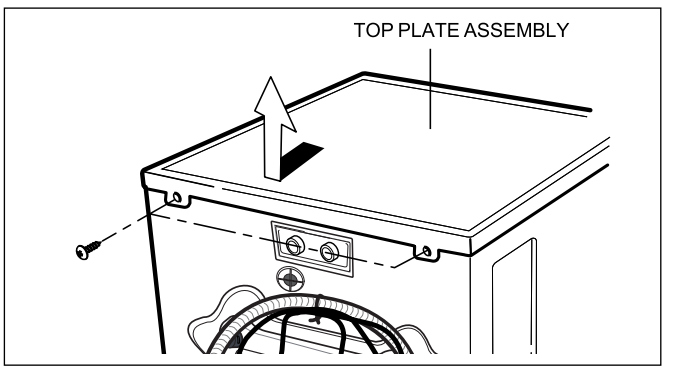

① Unscrew 2 screws on the back of the top plate.

② Pull the top plate backward and upward as shown.

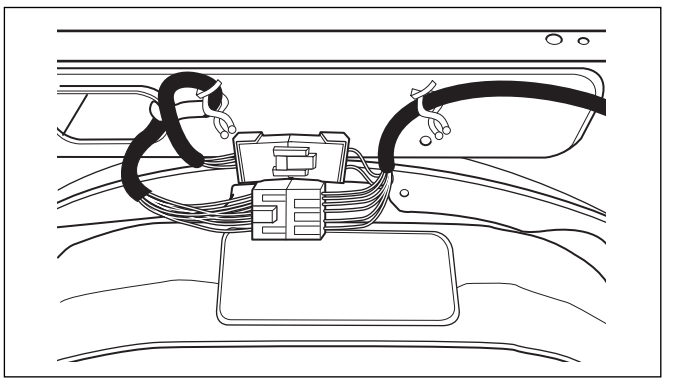

③ Disconnect the connectors from the Main PWB Assembly

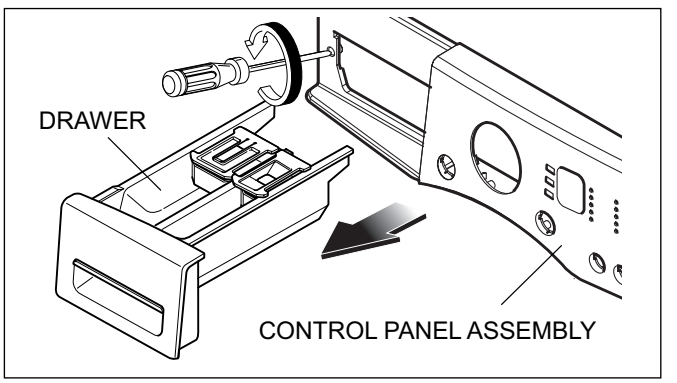

④ Pull out the drawer and unscrew 2 screws.

⑤ Lift the left side of the Control Panel Assembly and pull it out.

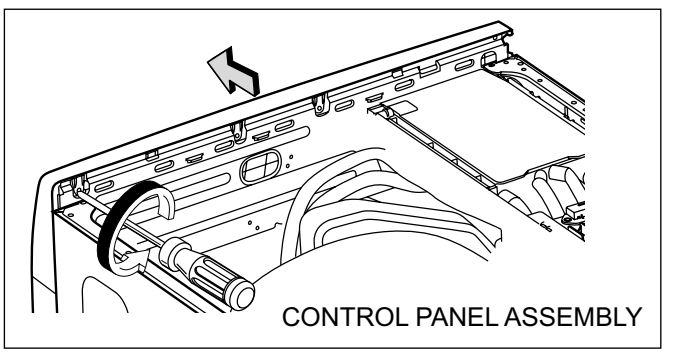

⑥ Pull out the control Panel unscrew 1 screws.

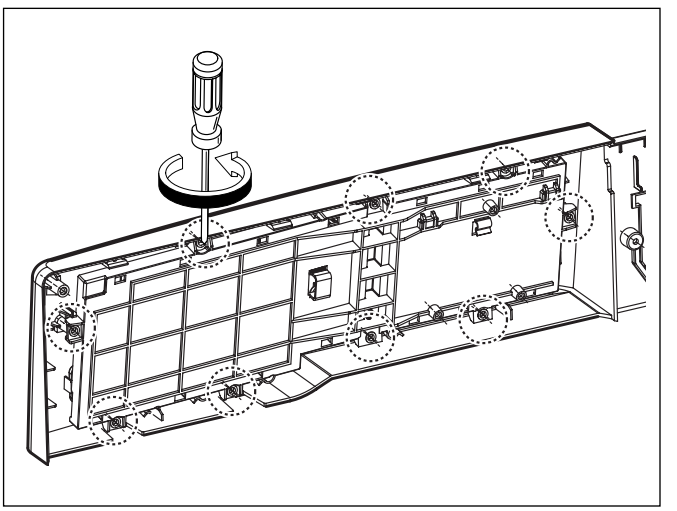

⑦Unscrew the 9 screws from the Control Panel Assembly.

⑧Disassemble the Display PWB Assembly.

MAIN PWB ASSEMBLY

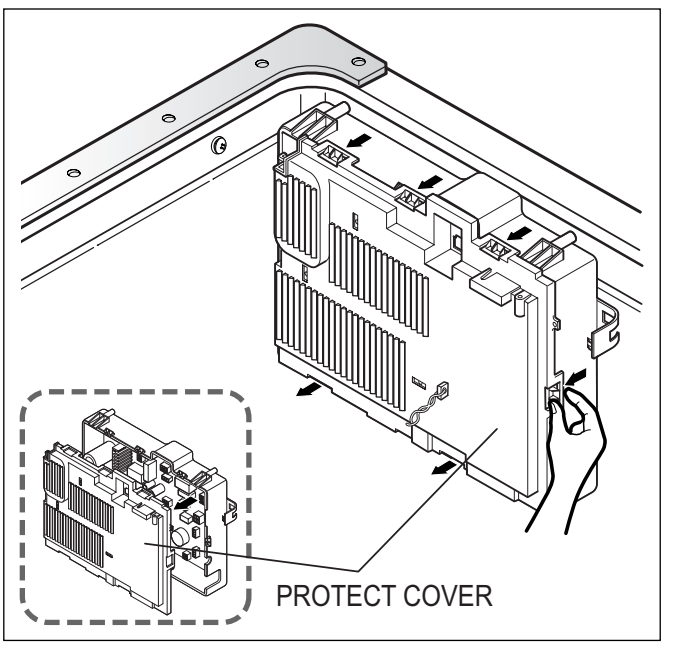

① Disconnect the POWER connector and SENSOR SWITCH ASSEMBLY.

② Remove the Protect Cover.

③ Disassembled keeping wire.

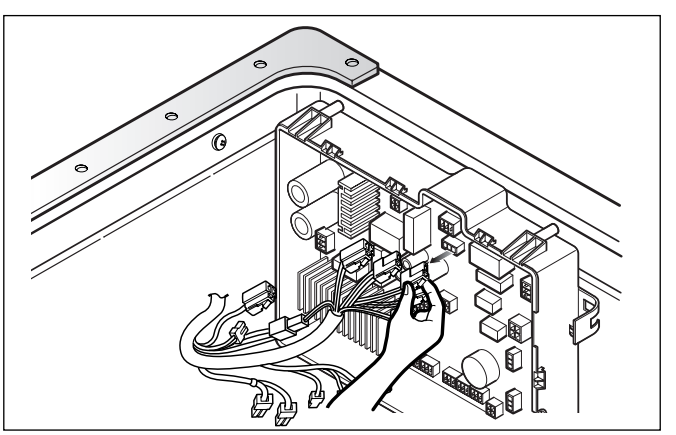

③ Disconnect the connectors.

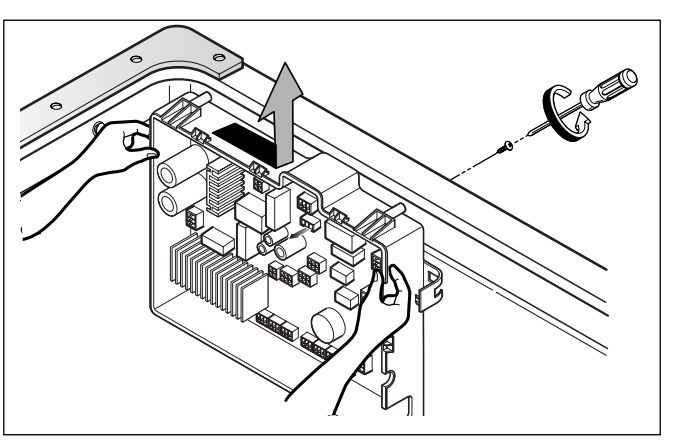

④ Unscrew 1 screw on the back.

⑤ Disassemble the Main PWB.

DISPENSER ASSEMBLY

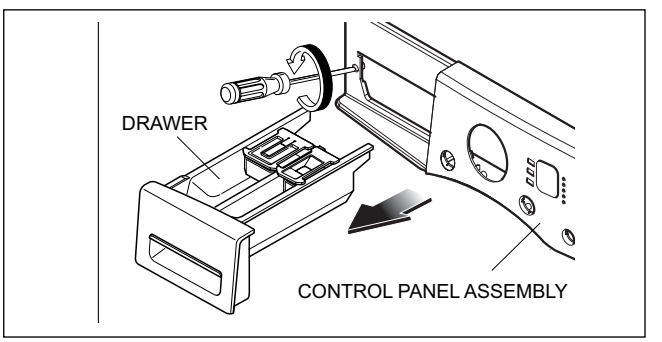

① Disassemble the top plate assembly.

② Pull out the drawer.

③ Push out the DISPENSER ASSEMBLY after unscrew 2 screws.

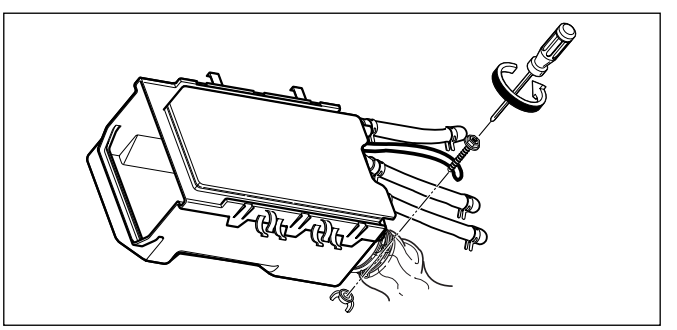

④ Unscrew the nut at the lower part of the dispenser.

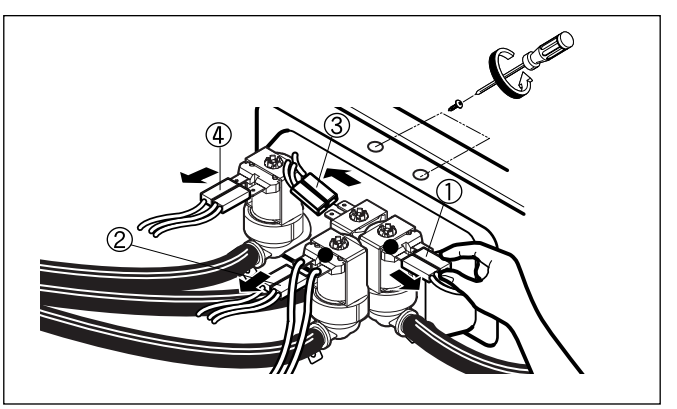

⑤ Disassemble the 4 connectors from the valves.

※ Wire Color
① Blue Housing (OR-BK)
② White Housing (WH-BK)
③ Blue Housing (GY-BK)
④ Red Housing (BL-BK)

⑥ Unscrew 2 screws from the back of the cabinet.

NOISE FILTER

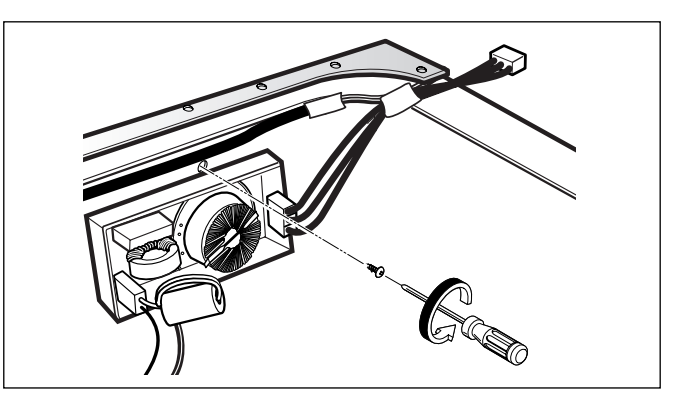

① Disassemble two connectors from the Filter Assembly.

② Unscrew a screw from the TOP BRACKET.

CABINET COVER

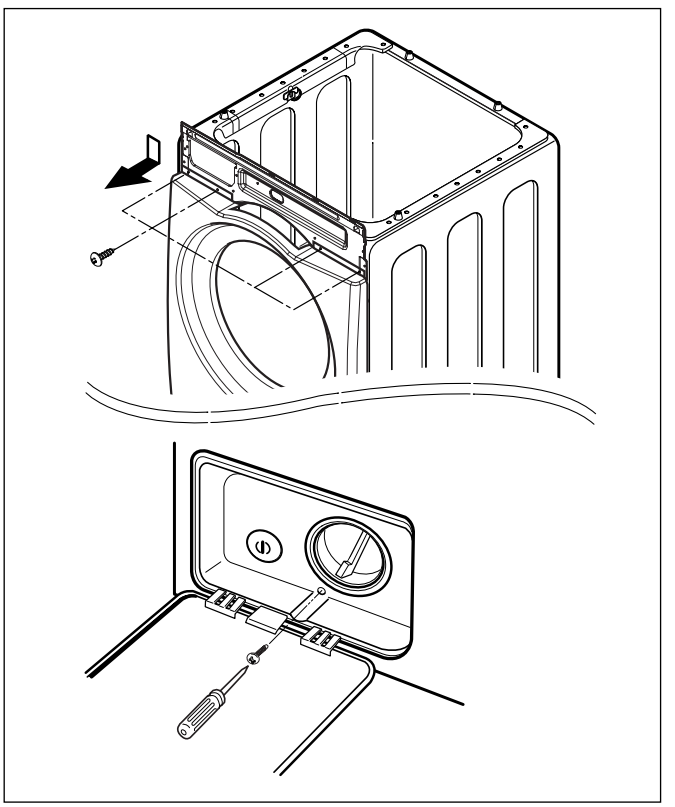

① Unscrew the 3 screws from upper of the canbinet cover.

② Unscrew the screw from filter cover.

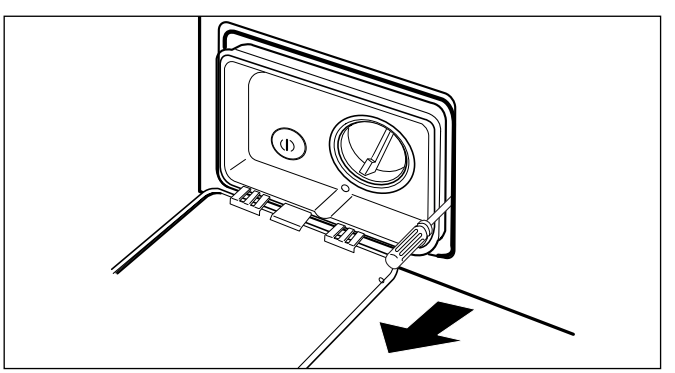

③ Put a flat (–) screwdriver or putty knife into the both sides of the filter cover, and pull it out.

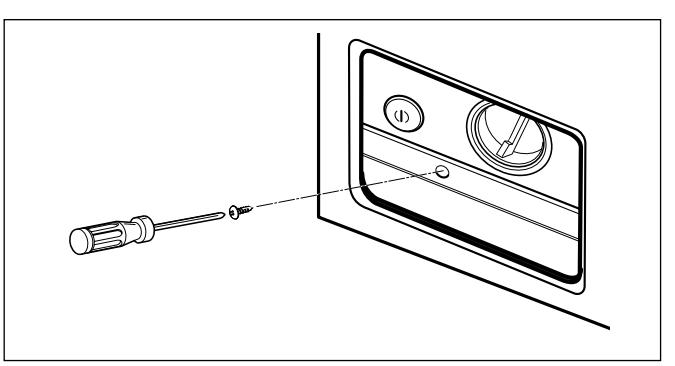

④ Unscrew the screw from the lower side of the cabinet cover.

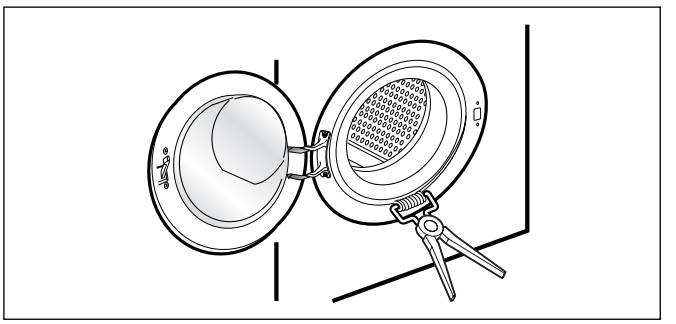

⑤ Open the door.

⑥ Disassemble the clamp assembly.

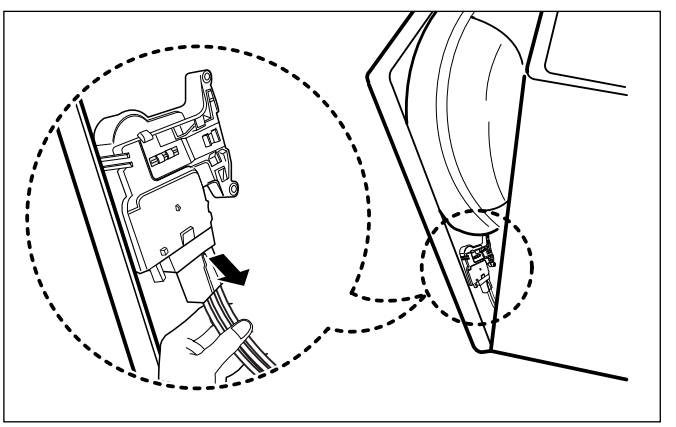

⑦ Tilt the cabinet cover.

⑧ Disconnect the door switch connector.

※ **NOTE**: When assembling the CABINET COVER, connect the connector.

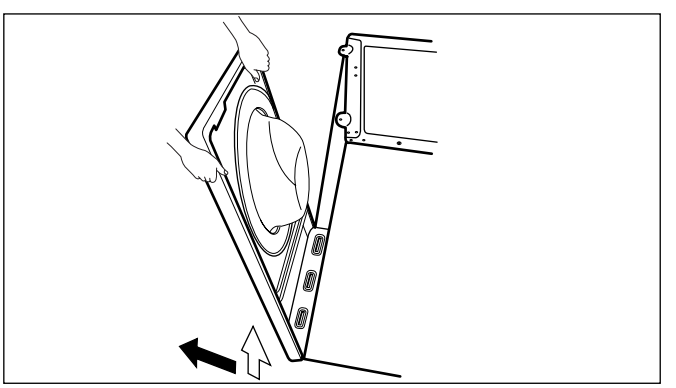

⑨ Lift and separate the cabinet cover.

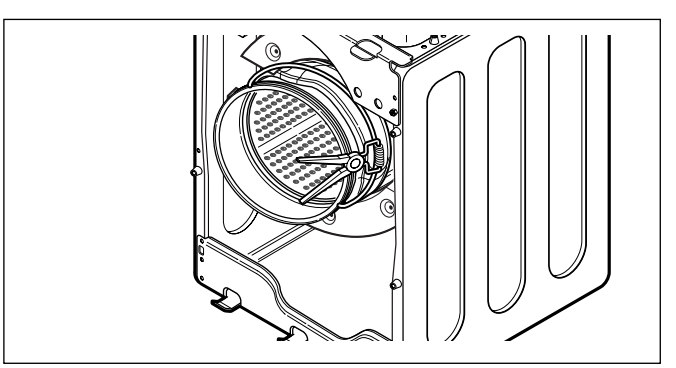

⑩ Disassemble the clamp assembly.

⑪ Disassemble the Gasket.

DOOR

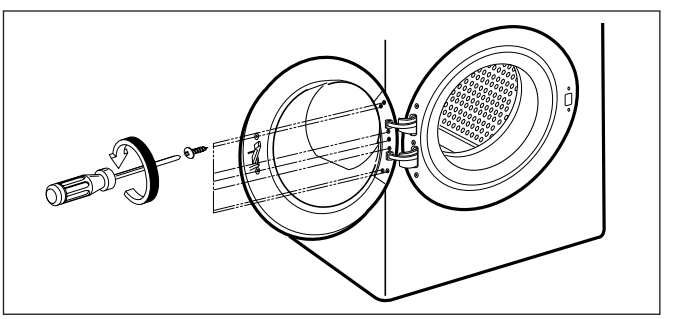

① Open the door.

② Unscrew the 7 screws from the HINGE COVER.

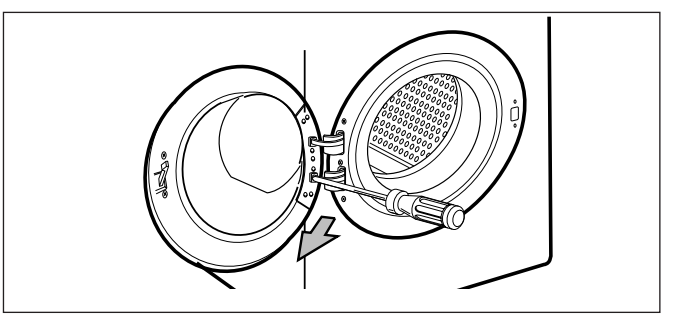

③ Put a flat (-) screwdriver into the openng of the hinge, and pull out the hinge cover.

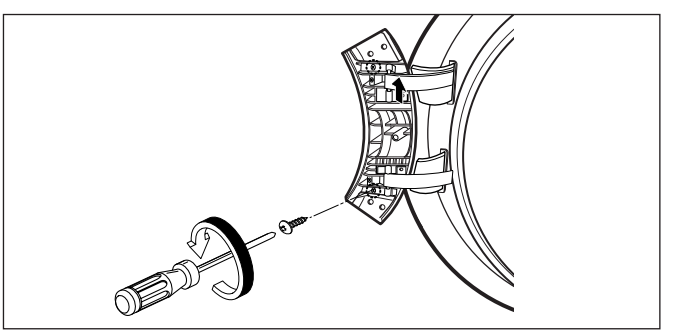

④ Unscrew a screw from the lower side of door.

⑤ Disassemble the door upward.

※ **Be careful!** The door is heavy.

DOOR LOCK SWITCH ASSEMBLY

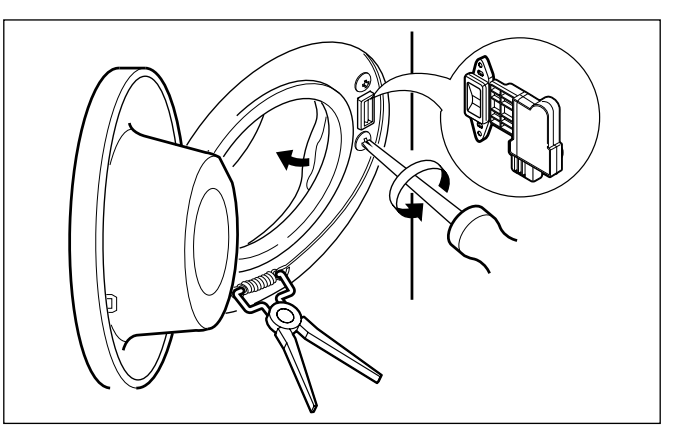

① Open the door and disassemble the CLAMP ASSEMBLY.

② Unscrew the 2 screws.

※ **NOTE**

- Reconnect the connector after replacing the DOOR SWITCH ASSEMBLY.

PUMP

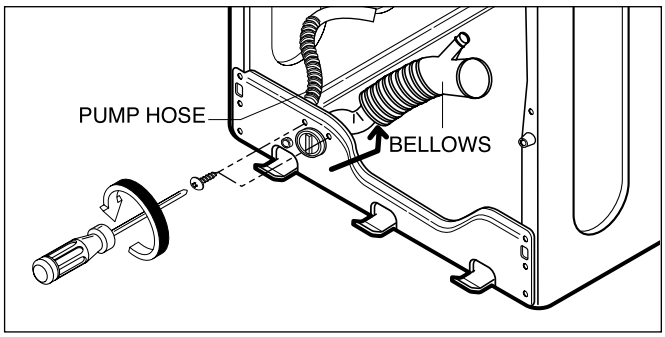

① Disassemble the cabinet cover.

② Separate the pump hose, the bellows and the circulation hose assembly from the pump assembly.

③ Disassemble the pump assembly in arrow direction.

THERMISTOR

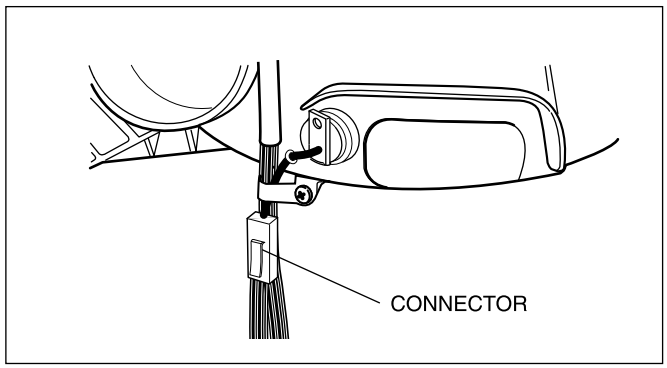

① Disassemble the Back cover.

② Unscrew a screw from the Tub.

③ Unplug the white connector from the thermistor.

④ Pull it out by holding the bracket of the thermistor.

MOTOR/DAMPER

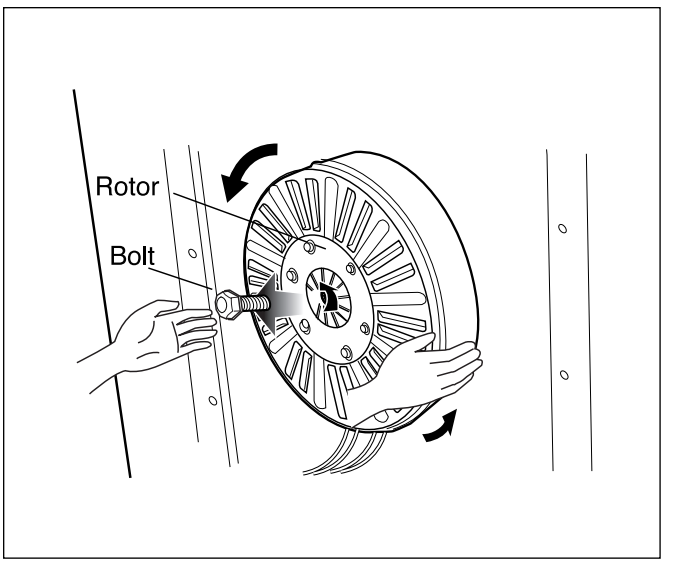

① Disassemble the back cover.
② Remove the bolt.
③ Pull out the Rotor.

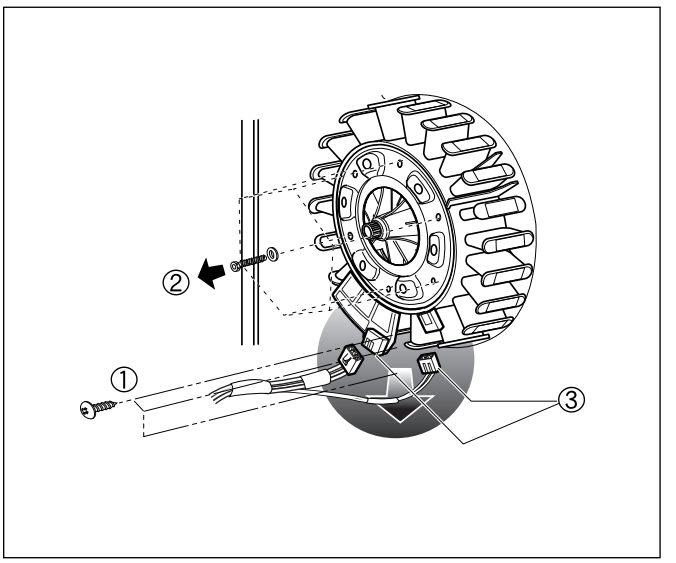

① Unscrew the 2 screws from the tub bracket.
② Remove the 6 bolts on the stator.
③ Unplug the 2 connectors from the stator.

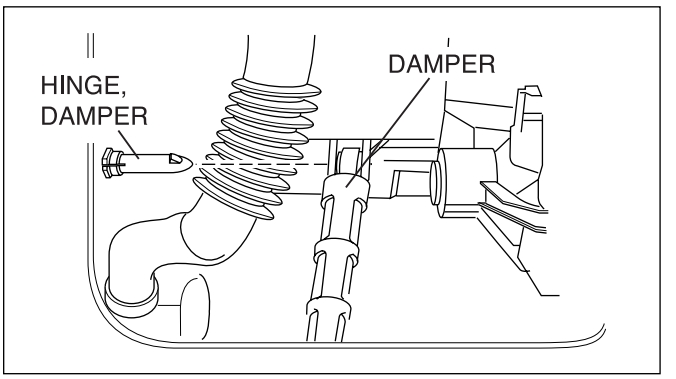

① Disassemble the damper hinges from the tub and base.
② Separate the dampers.

※ NOTE
- Once removed, replace the damper with new one.

10. EXPLODED VIEW

10-1. CABINET & CONTROL PANEL ASSEMBLY

"The following parts are not illustrated"		
	Description	Loc No.
Printed materials	*Owner's Manual	G001
	*Energy Label	G002
	*Service Manual	G004
	*Wiring Diagram	G005
	*Quick Start Guides	G006
	*Installation Sheet	G007
	*Non-Skid Pads	G010

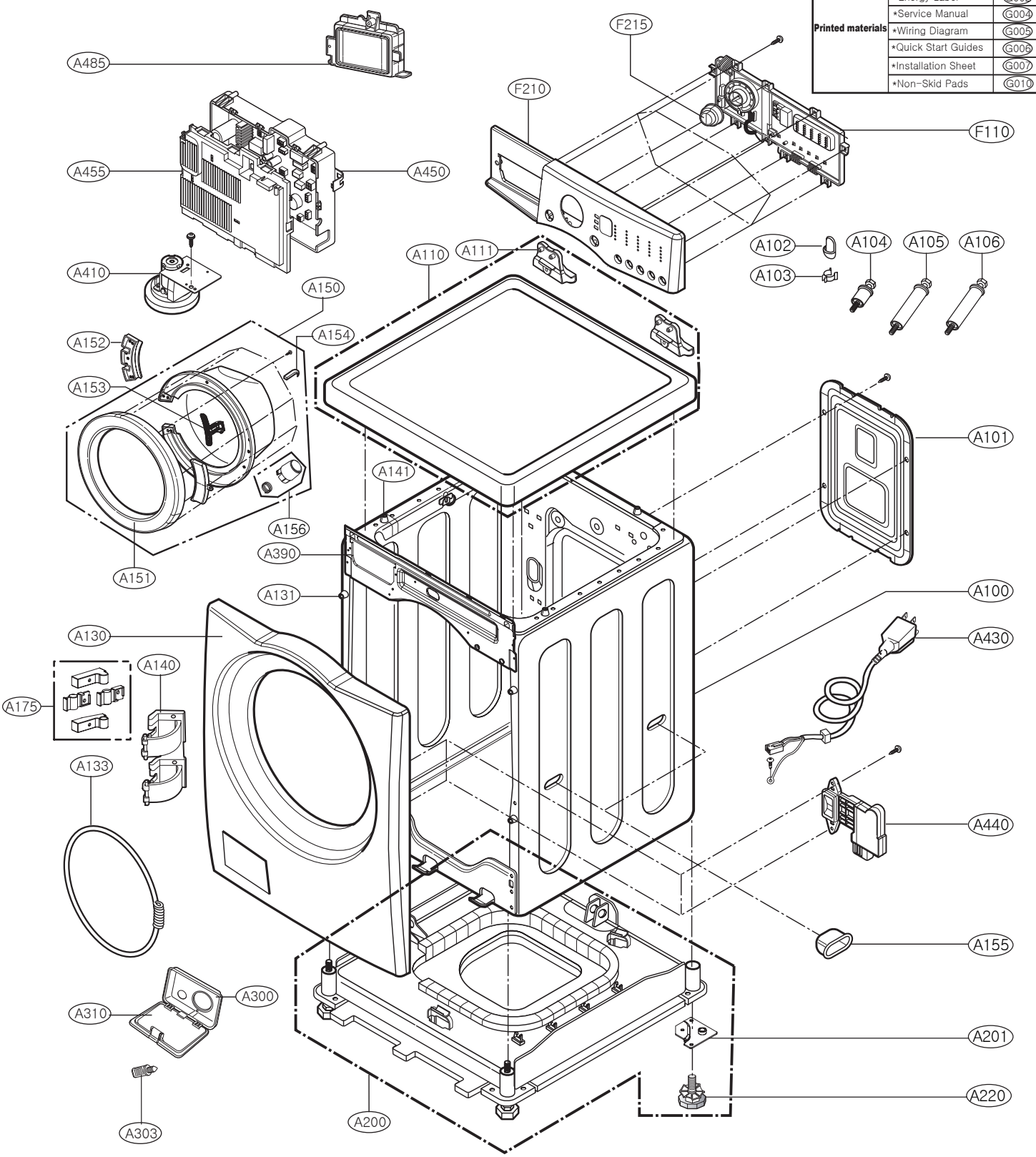

10-2. DRUM & TUB ASSEMBLY

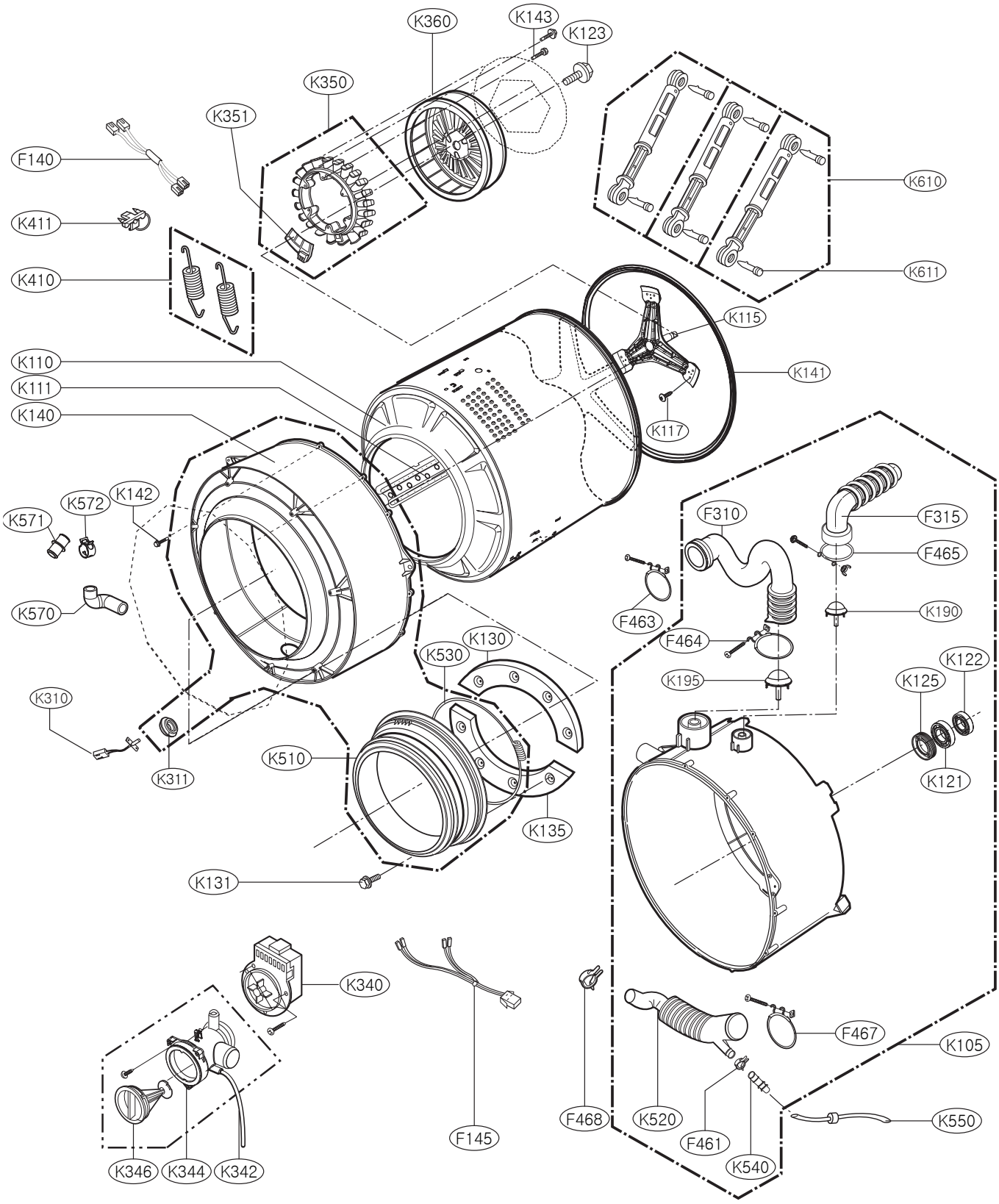
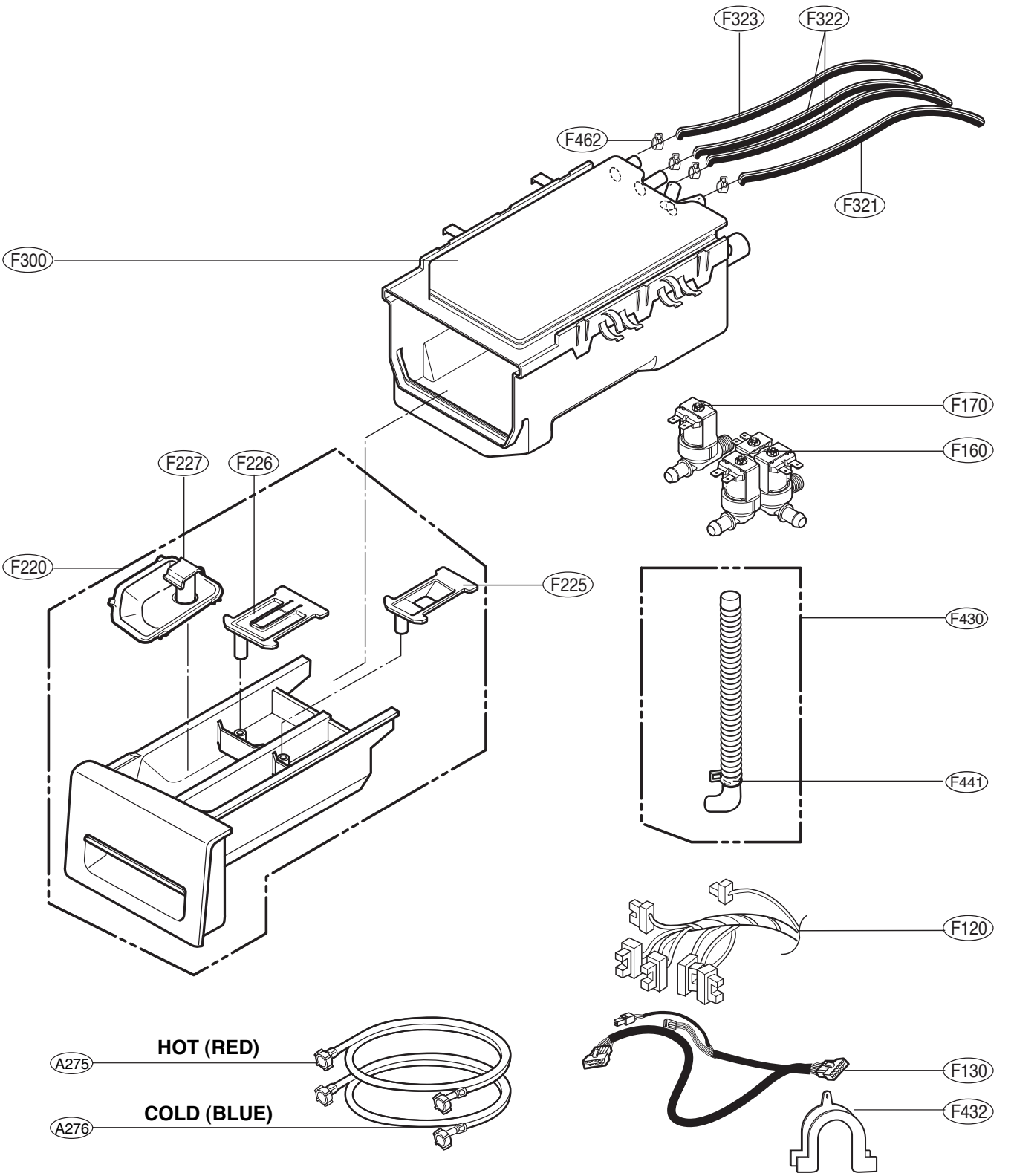
10-3. DISPENSER ASSEMBLY